# Installationsvejledning
# Montageanweisung
# Installation instruction
# Instructions d'installation
# Istruzioni di installazione
# Installatie- -instructies
# Instrucciones de instalación

damixa™

**Østbirkvej 2, 5240 Odense NØ, Denmark**
**Tel. +45 63 102 210**
**E-mail: damixa@damixa.com**
**Homepage: www.damixa.com**

09.09 20025.00

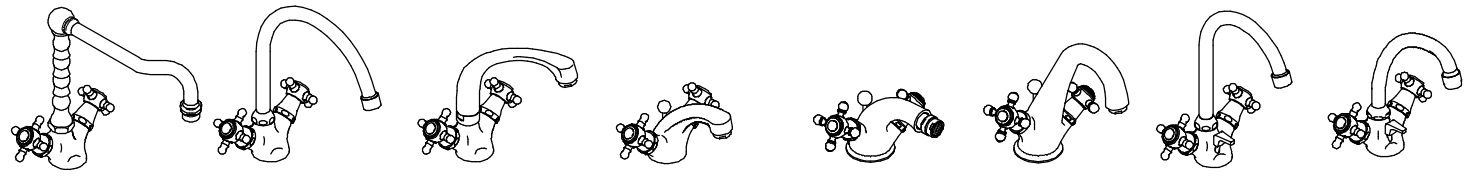

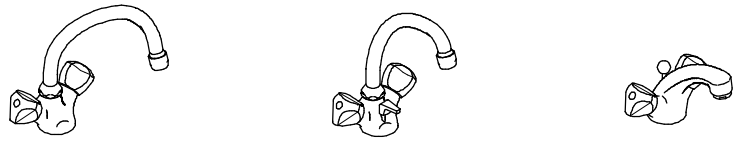

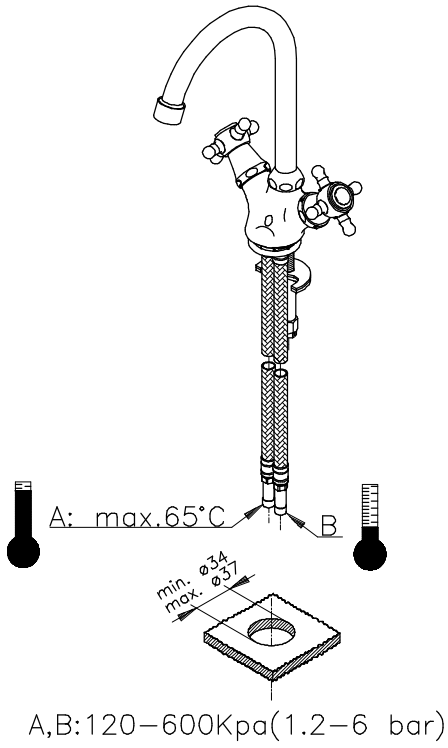


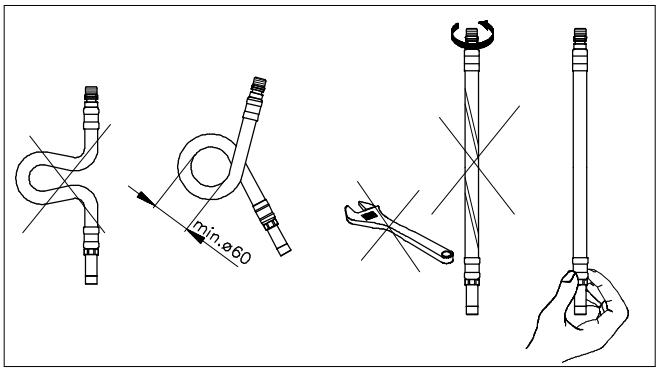


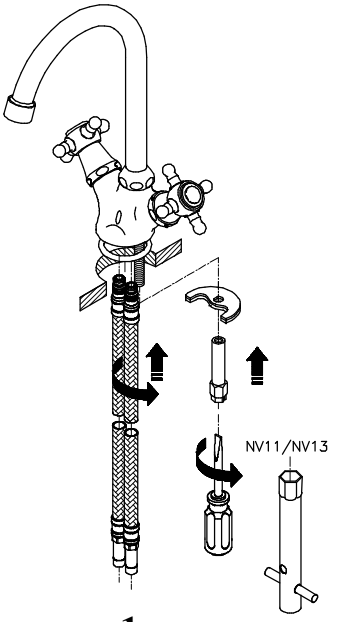


1

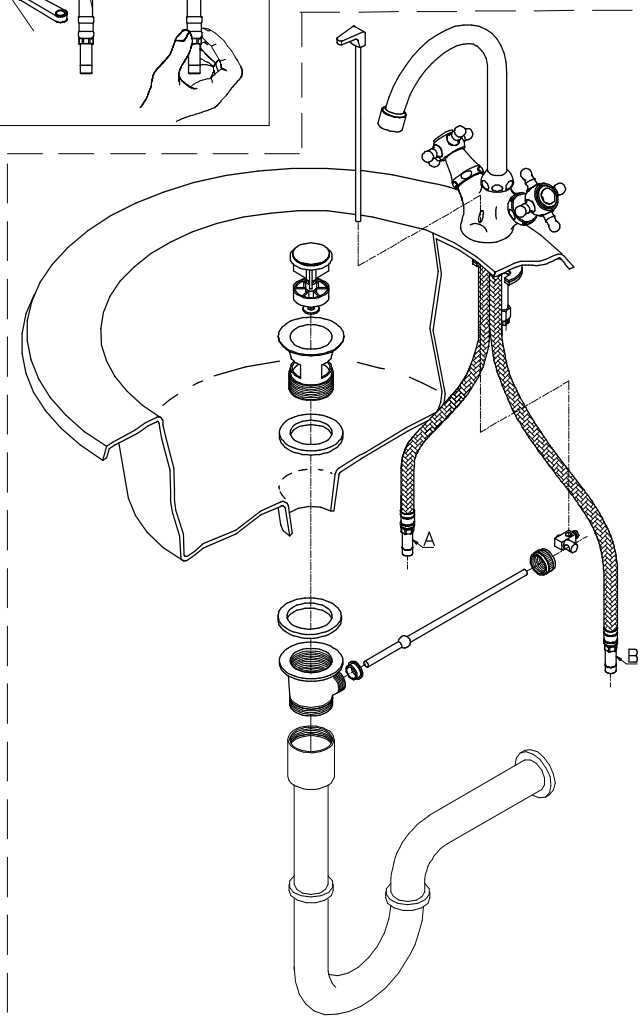


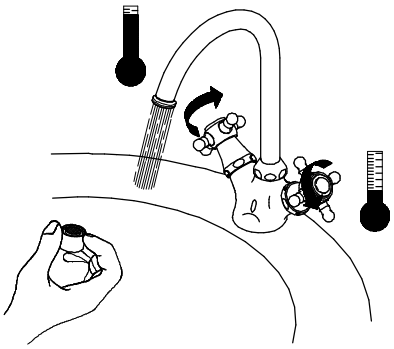

2